





Clifton Hill, St Johns Wood, NW8 £2,400 Per Month Furnished

Superb Private Roof terrace - This fabulous Space offers a peaceful sun terrace with lovely views. Ultra Modern and stunning cottage located in a highly desirable street in the heart of St John's Wood. The accommodation is bright, modern and very well planned to offer fully equipped kitchen, reception room with wooden floors, stairs leading to double bedroom and shower room en-suite. The Cottage boasts modern, luxury fittings, high quality furniture, Fitted LED TV, spiral staircase private balcony and roof terrace. Clifton Hill is located close to all the local shopping and transport facilities of St John's Wood High Street including St John's Wood Underground Station (Jubilee Line), within walking distance to The American School in London (ASL) and Maida Vale Underground Station (Bakerloo Line).











Clifton Hill

Approx. Gross Internal Area 376 Sq Ft - 34.93 Sq M

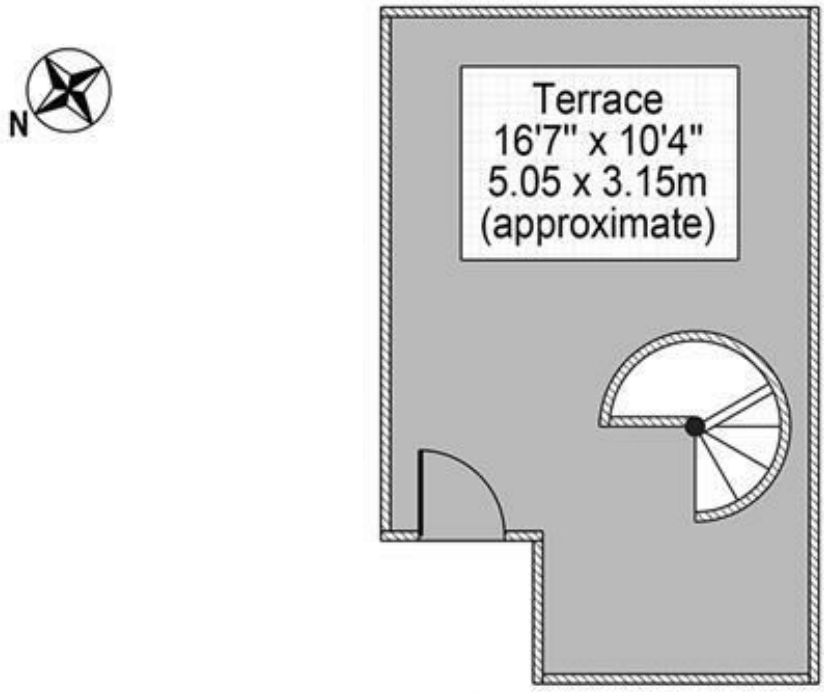

Second Floor



Ground Floor

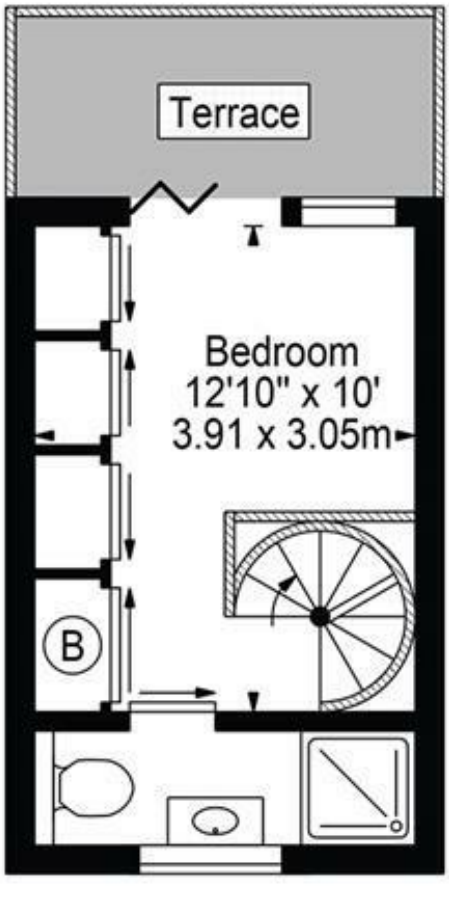

First Floor

For Illustration Purposes Only - Not To Scale

This floor plan should be used as a general outline for guidance only and does not constitute in whole or in part an offer or contract.
Any intending purchaser or lessee should satisfy themselves by inspection, searches, enquiries and full survey as to the correctness of each statement.
Any areas, measurements or distances quoted are approximate and should not be used to value a property or be the basis of any sale or let.

Property Overview

Location	St Johns Wood, NW8
Price	£2,400 Per Month
Bedrooms	1
Bathrooms	1
Receptions	1
Council	Westminster - £1,243.22
Tax Band	E
Furnishing	Furnished

Key Features

- Stunning Cottage
- Over two floors
- Modern Interior
- High Quality Furniture
- Wooden Floors
- Spiral Staircase
- Roof Terrace
- Balcony
- Close to Transport Links

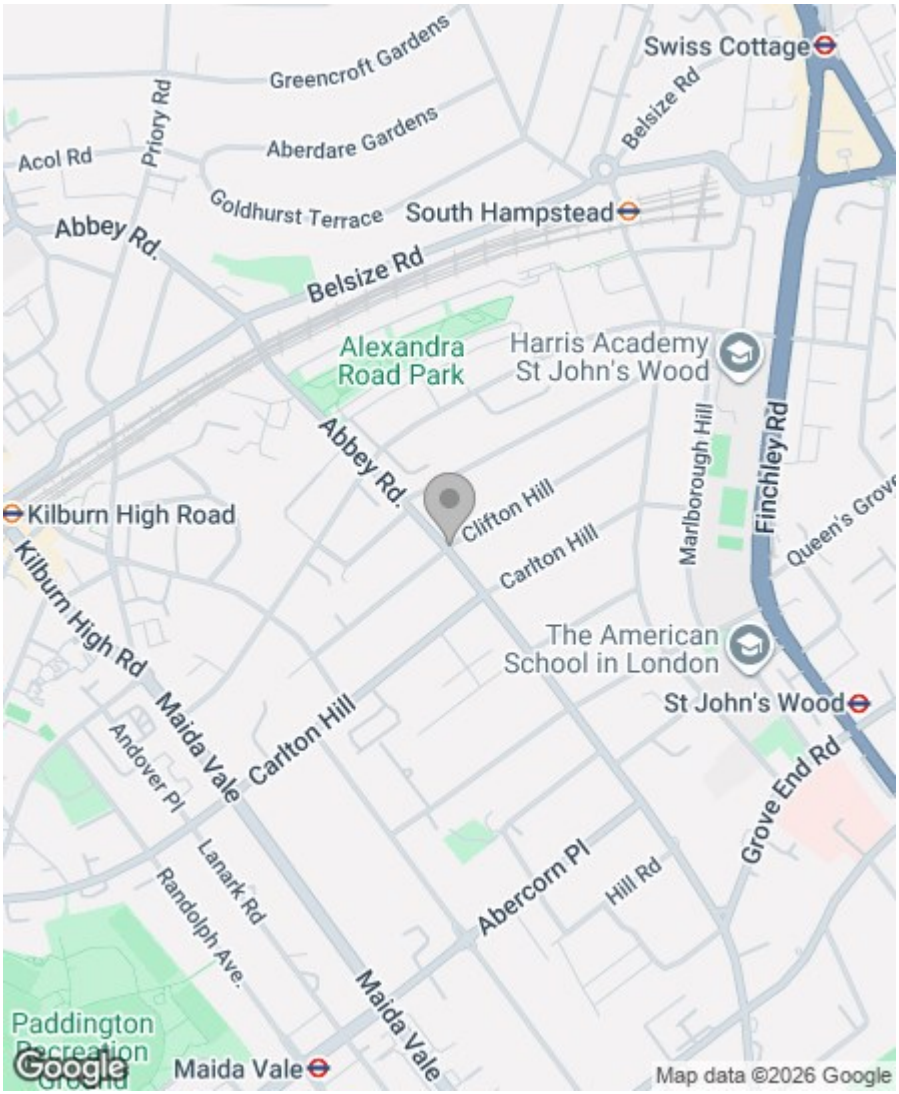

Energy Efficiency Rating

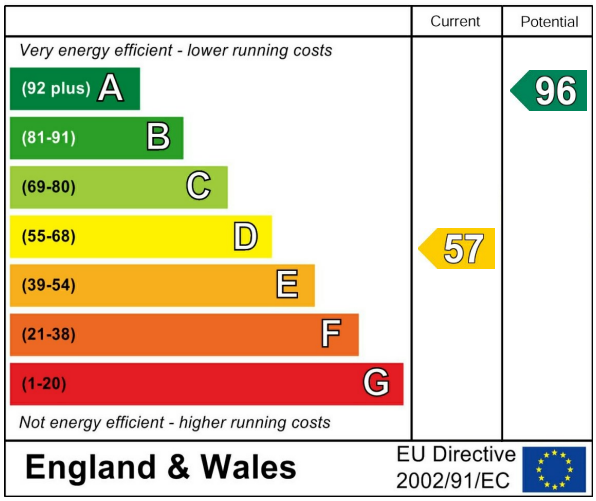

Greenstones Estates Ltd
Registered in England & Wales
Registered Office:
5 West Court, Enterprise Road,
Maidstone, Kent ME15 6JD

Company Registered number
03513585

Trading address
83 Boundary Road, St John's Wood,
London NW8 0RG

We are members of

arla | propertymark PROTECTED

The Property Ombudsman

IMPORTANT NOTICE: All of the information is intended only as a guide to a prospective purchaser and does not constitute any part of an offer or contract. Any measurements or distances referred to herein are approximate only. Any information contained herein (whether in the text, plans or photographs) is given in good faith and cannot be relied upon as being a statement or representation of fact. Should you proceed with the purchase of the property, your solicitor must verify these details. We have not carried out a detailed survey nor tested the services, appliances and specific fittings. In accordance with current legislation we would advise you that the measurements on these particulars are imperial. The formula for conversion to metric is as follows:- 1' (one foot) = 30.4cm (centimetres), 1m (one metre) = 3'29 (feet).